ELSEVIER

Journal of Molecular Catalysis A: Chemical 98 (1995) 147–155

JOURNAL OF MOLECULAR CATALYSIS A: CHEMICAL

Quantum-chemical investigation of the geometric structure of the Lewis acid sites of the α-Al_2O_3 faces (0001), (11$\bar{2}$0), (22$\bar{4}$0)

L.G. Gorb *, N.N. Ilchenko, V.V. Goncharuk

Institute of Water and Colloid Chemistry Academy of Science of Ukraine, Vernadsky av. 42, Kiev-142, 252680, Ukraine

Received 9 February 1994; accepted 24 November 1994

Abstract

The quantum-chemical investigation of the Lewis acid site (LAS) geometric structure for perfect dehydroxylated α-Al_2O_3 faces (0001), (11$\bar{2}$0) and (22$\bar{4}$0) produced by oxide chopping along the chosen crystallographic direction was performed by the semiempirical approximation SCF MO LCAO MINDO/3 in the frame of the cluster scheme. The relaxation the geometric position of the Al atoms turns out to be maximum for the (0001) face, the principal possibility of the existence was shown for the surface Al atoms being in the three-coordinated state. The characteristic features of the 'single' and 'paired' LAS geometric structure for the (22$\bar{4}$0) face have been investigated, with the latter containing the aluminum atoms in the five-coordinated state. The influence of the mutual repulsion of the two incompletely coordinated atoms on the geometric characteristics of such sites is described. In addition, the process of the LAS–H_2O molecule interaction according to the associative and dissociative adsorption mechanisms has been studied.

1. Introduction

The wide application of the α-Al_2O_3 in such fields as microelectronics [1] and catalysis [2–4] explains the experimentalist's and theorist's interest in its surface structure. It is known [5] that α-Al_2O_3 is the highest-temperature modification of the aluminum oxide, and has the following structure: the anion sublattice consists of the hexagonal dense-packed layers of the O^{2-}, and the cations of the Al^{3+} are situated only in octahedral positions, 1/3 of them being free. However, knowledge of the oxide bulk geometric structure is of a little help when trying to imagine its surface geometric structure, because the atoms on the surface are influenced by the forces different from those in the bulk.

The data of the physicochemical research indicate the existence of a certain irregularity of the surface structure, manifesting itself primarily in the existence of Lewis and Brønsted acid sites (LAS and BAS) of different strength. The wealth of experimental and theoretical research of BAS is rather vast; so this article practically will not deal with this matter. As for the LAS, the amount of research is substantially less, may be because of the experimental difficulties.

The data of the ESR spectroscopy suggest that no less than two LAS types on the α-Al_2O_3 surface exist [6]; according to the NMR spectroscopic data, the Al^{3+} ion coordination number is 6 [7]; according to IR spectroscopic data, the surface aluminum cations coordination number may be 6 or 4, depending on the degree of thermoprocessing [8,42], moreover the latter method enables one to

* Corresponding author.

1381-1169/95/$09.50 © 1995 Elsevier Science B.V. All rights reserved
SSDI 1381-1169(95)00003-8

measure the LAS force [9]; the calorimetry data show a rather wide range of absorption heats (for instance, for H_2O they range from 20 to 50 kcal/mol) [10–12].

Thus the data obtained by experimental methods do not solve the problems of the geometric structure of LASs and their changes caused by the absorbed molecules. The problem of the mechanism of their catalytic influence is not practically considered either. At the same time, the current level of the semiempirical quantum-chemical methods enables one to obtain quite reliable results concerning the geometric and energetic characteristics for the systems containing non-transition elements of the first three periods [13,14]. According to this, the opportunities given by these methods seem interesting. For example, semiempirical approximations from CNDO to MNDO proved to be quite satisfactory in the field of adsorption and catalysis quantum theory of non-transition metal oxides [15–19]. In particular, the calculations of this type have been used successfully for the theoretical explanation of a large number of facts in the areas of synthesis, surface chemistry, adsorption and catalytic activity of the different generations of zeolites [20,21]. According to recent papers on this calculation, about 100 Al, Si and O atoms [22] were taken into account.

It should be primarily mentioned that there are a number of publications concerning the methods of aluminum oxides calculations (e.g. see [23–31]). But these works are mainly directed towards research on the electronic structure of the oxide bulk. Analysis of the results of work published [23–28] on the quantum-chemical research of LAS shows that they mostly have at least one of two disadvantages: (i) insufficient or no optimization of geometric parameters; (ii) insufficient modeling of the hypervalence surroundings of the oxide atoms.

According to the above we began the series of calculations for the investigation of Al_2O_3 LASs. As the first step we have proposed some cluster models having hypervalence surrounding for the aluminum oxides [30]. It was shown, in particular, that there is no necessity to use various types of 'pseudoatoms' on cluster borders, in order to model the α-Al_2O_3 surface, because the closing of the broken valences by the H atoms was shown to give satisfactory results. These results were used for the investigation of α-Al_2O_3 0001 face [49]. This paper is the continuation of this series.

The aim of this report is the quantum-chemical investigation of the geometric structure of the LASs of the α-Al_2O_3 surface. Besides, in connection with the questions on the catalytic active center relaxation [14,31,32] being widely discussed recently, the said question is studied in this work, taking the LAS–H_2O molecule interaction as an example.

In [33,34] it was shown that the faces (0001), $(11\bar{2}0)$ are characterized by the minimum surface energy. In this connection we calculated the LAS geometric structure for these faces, and for the face $(22\bar{4}0)$, liable to form a so-called 'paired' LAS [35].

The last aspect is the correspondence of these models to the real α-Al_2O_3 surface. As will be seen later, we consider the perfect, completely dehydroxylated α-Al_2O_3 surface, i.e., the chop along the axes with the corresponding crystallographic indexes.

2. Models and calculated method

The LAS models for the completely dehydroxylated faces (0001), $(11\bar{2}0)$, and $(22\bar{4}0)$ are shown in Figs. 1–4. The faces were constructed under the assumption of the perfect maximum density packing of the O^{2-} ions. While doing this the following rules were adopted:

1. The face part being calculated should have face symmetry elements.
2. The oxygen and aluminum ions forming the LAS nearest surrounding should have the same coordination numbers as in the bulk. This rule should be followed to obtain the correct description of other surface structural reconstructions.

3. The LAS Al^{3+} ion should be situated on the surface, in a way to ensure the maximum coordination number of O^{2-} surface ions. This rule defines the way of the Al^{3+} ion distribution when making a chop along the chosen crystallographic direction.

To close the broken valences inevitably resulting from the cluster, an approximation [14,36] was used, where the broken valences were closed by the hydrogen atoms, and the hydroxyl groups or the water molecules were formed. The first were situated in the crystallographic positions where O^{2-} interacts with one (for a surface) or two Al^{3+} bulk ions, and the second in the positions where O^{2-} belongs to the bulk and interacts with one Al atom. The total charge of the cluster was equal to zero in all cases.

The calculations were made according to the semiempirical method SCF MO LCAO in the valence approximation MINDO/3 [37] using the GEOMO [38] program modified by the authors. The two-center parameters for the Al–O bond, which are absent in the standard version, were taken from [39]. These parameters were verified by the structure reconstruction calculation in zeolites [14,40,41]. The geometry optimization involved all the internal coordinates of LAS Al^{3+} ion and of its closest oxygen surrounding. The clusters with stoichiometric formula $Al_{11}O_9(OH)_{15}(H_2O)_9$, faces (0001) and $(11\bar{2}0)$, $Al_6O_3(OH)_{12}(H_2O)_4$ and $Al_6O_3(OH)_{12}(H_2O)_6$, face $(22\bar{4}0)$, which model two aluminum–oxygen layers of the oxide were studied. In initial structures $R_{Al-O} = 1.970$ Å, $R_{Al-Al} = 2.786$ Å and 2.275 Å $R_{O-H} = 0.960$ Å.

3. Results and discussion

Face (0001). Fig. 1. shows the initial geometry of LAS. The bulk Al^{3+} ions are situated in the centers of perfect octahedra in accordance with the above statement, the O^{2-}, OH^- ions or H_2O molecules are situated in the octahedral vertices. The LAS Al^{3+} ion possesses the crystallographic position.

After the geometric optimization had been completed, the substantial reforming of the LAS geometric structure took place, leading to the displacement of the Al^{3+} ion from the crystallographic position into the octahedral void to the equilibrium position at a distance of 2.372 Å from oxygen bulk ions. In more detail this LAS geometric structure is shown in Fig. 1B, and main parameters are given in Table 1.

For further calculations it was important to find out the number of these aluminum–oxygen octahedra, substantially influencing the LAS geometric characteristics. In particular, it was necessary to consider whether the second aluminum–oxygen

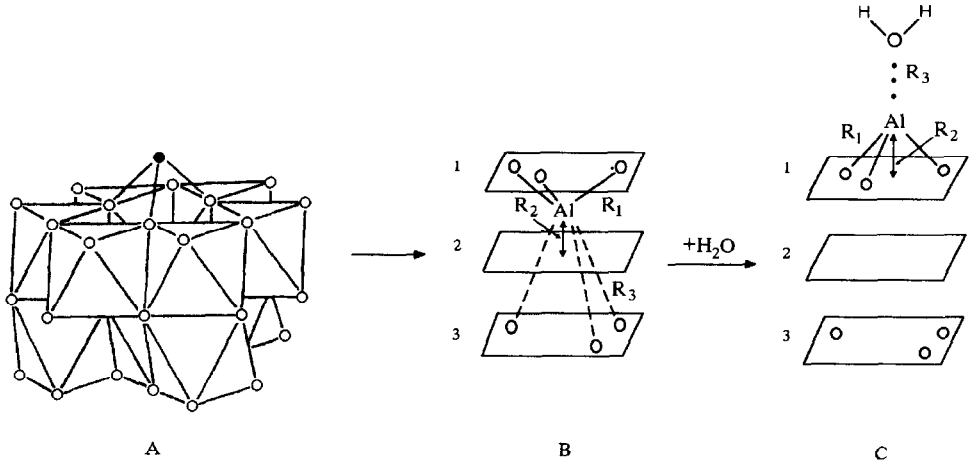

Fig. 1. The α-Al_2O_3 (0001) faces geometric structure variation due to the action of the H_2O molecule. 1 – The surface oxygen atoms plane; 2 – the bulk aluminum atoms plane; 3 – the bulk oxygen atoms plane; ○ – oxygen; ● – aluminum.

Table 1
Geometrical and energetic characteristics of the local minima shown in Figs. 1–5 [a]

Structure	Parameter						
	R_1	R_2	R_3	R_4	R_5	R_6	ΔH
1B	1.757	0.604	2.372	–	–	–	−3717.19
1C	1.766	0.431	1.946	–	–	–	−3792.06
2B	1.655	1.829	1.741	0.419	–	–	−3601.85
2C	1.691	1.889	1.772	0.614	1.922	–	−3684.37
3B	1.885	1.885	1.972	1.972	–	–	−1975.20
3C	2.015	1.854	1.973	1.970	2.085	–	−2042.91
3D	1.972	1.976	1.970	1.970	2.061	2.068	−2107.15
4B	1.757	1.981	–	–	–	–	−2022.54
4C	1.806	1.977	2.152	–	–	–	−2093.24
5B	1.800	0.768	1.772	–	–	–	−3805.16

[a] The interatom distances Al–O are given in Å, and the heats of formation in kcal/mol.

layer octahedra would have to be accounted for. For this reason, in addition to the geometry optimization of the LAS illustrated by Fig. 1 which consists of 10 octahedra, 6 of which are in the first layer, the optimization of the LAS geometric parameters of the clusters was done: the clusters having 6 first layer octahedra, stoichiometric formula $Al_7O_3(OH)_{15}(H_2O)_6$; those having 7 octahedra, (the 7th lies in the second layer, in the ring center), $Al_8O_6(OH)_{12}(HO)_9$; those having 11 octahedra, including 6 in the first, 4 in second and 1 in the third layer, $Al_{12}O_{12}(OH)_{12}(H_2O)_{12}$. The most representative characteristic for this analysis is the distance from the LAS Al^{3+} ion to the plane where the aluminum bulk ions are situated (the plane 2, Fig. 1B, the R_2 parameter). For the cluster having 6, 7, 10 and 11 octahedra, this distance varies in the following sequence 0.177; 0.438; 0.605; 0.516 Å respectively. So we see, that the LAS geometric parameters are mainly determined by the interaction with the octahedra of the first and second layers. Further calculations were made for clusters having two aluminum–oxygen layers.

Face $(11\bar{2}0)$. The initial geometry for the optimization is shown in the Fig. 2A. In contrast to the face (0001), the LAS Al^{3+} ion does not lie over the octahedral void, but near it, according to the crystallographic data; as a consequence, this ion should be fixed on the surface more rigidly. Fig. 2B shows the detailed LAS geometric form after optimization of the geometry. We can see that in this case the LAS is the AlO_3 fragment where the Al^{3+} cation has not formed any additional bond with the oxygen bulk atoms. The Al^{3+} deviation from the oxygen atoms plane (the R_4 parameter) is 0.419 Å. The mean Wiberg index for the Al–O bond equals 0.829.

Since the cluster we are studying has the same stoichiometric composition and the same number of O^{2-}, OH^- groups and H_2O molecules as the face (0001) cluster, it seems expedient to compare their heats of formation. The values of the total energies and heats formation with respect to the minimum B (Fig. 2) are given below:

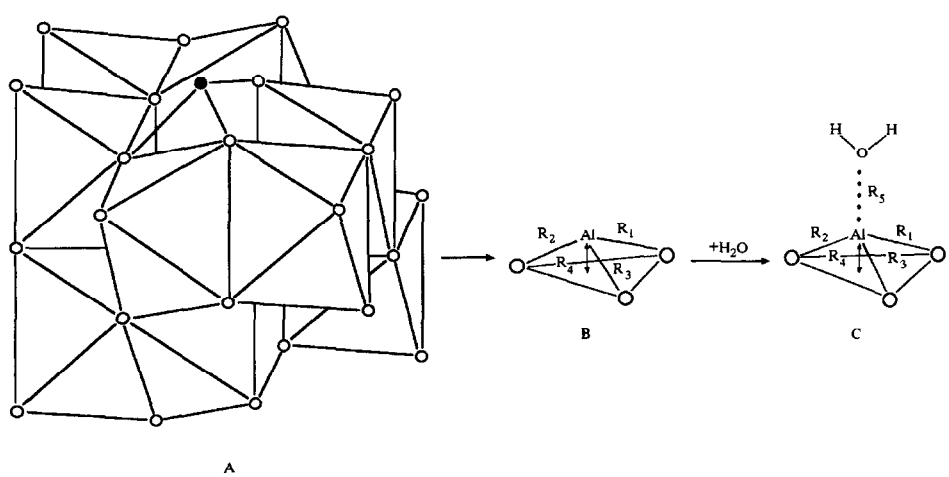

Fig. 2. The $(11\bar{2}0)$ face LAS structure and its complex with water molecule.

	1A	2A
E_{tot} (a.u.)	−418.86525	−418.68149
$\Delta\Delta H$ (kcal/mol)	0.0	115.34

One can see that the geometric structure of the cluster face (0001) is energetically preferable: this corresponds to the data presented in [33,34] for the free surface energy values for the different α-Al_2O_3 faces. This fact is a valid argument for the statement that the existence of the $(11\bar{2}0)$ face is less probable in the real oxide than that of the (0001) face. This in turn indirectly explains the fact that the literature does not contain any reliable experimental data on the existence of the three-coordination state of the Al atom on the α-Al_2O_3 surface.

Face $(22\bar{4}0)$. In spite of the absence of any references to the free surface energy for this face and the difficulty entailed in estimating the probability of its existence in the real oxide, we considered the necessity of the calculation of the α-Al_2O_3 bulk chop along this direction as obvious, because the resulting surface contains the aluminum atoms in the five-coordination state, namely those atoms displaying the LAS properties. In addition this chopped geometric structure implies the existence not only of the 'single' but of 'paired' LASs – two closely situated Al atoms with a coordination number of 5. Experiments had shown the existence of such sites on the various modifications of the aluminum oxide [42,43]. In these articles the peculiarities of the interaction of these sites with the absorbent molecules have been considered (the quantum-chemical calculation data).

The initial geometry for the clusters modeling 'single' or 'paired' LASs is shown in Figs. 3A and 4A. The compositions of the clusters are $Al_6O_3(OH)_{12}(H_2O)_4$ and $Al_6O_3(OH)_{12}(H_2O)_6$. In contrast to the faces considered above, the coordination number of the LAS Al atoms in the initial structures is 5. The geometric structure of the local minima obtained is shown in Fig. 3B and 4B and the corresponding geometric and energetic characteristics are given in Table 1. It can be seen that in both cases the interatom distances between the LAS Al atoms and the surface oxygen atoms change only slightly without formation of additional coordinate bonds. It should be also underlined that in both cases the geometric characteristics of the systems under consideration are strongly influenced by the mutual repulsion of the LAS Al^{3+} cations. In the 'paired' sites, because of their specific geometric structure, such interaction implies the displacement by 0.212 Å of the Al^{3+} cations inside the cluster as compared with the initial state (see Fig. 3C, the R_1 parameter). In the 'single' site the analogous changes of R_1 and R_2 parameters are less than or equal to 0.082 Å (see Fig. 4B).

The LAS–H_2O molecule interaction. As mentioned in the introduction, the LAS–H_2O molecule interaction was subjected to our investigation primarily due to the question about the catalysis active center relaxation under the influence of the reactant widely discussed in the literature. As a rule in this case the examples from the field of the catalysis oxidizing–reducing reactions [31] are used but the papers [31,32] contain some qualitative data about possibility of such relaxation in the field of the catalysis acid–base reaction.

In this respect the H_2O molecule can be a convenient model strongly representing the characteristics of the Lewis base. The geometric characteristics of the adsorption complexes are shown in Fig. 1B–4B and 4G. The most interesting result is the transformation of the LAS oxygen surrounding of the face (0001), Fig. 1B. The essence of the changes lies in the fact that when the LAS of this kind and the H_2O molecule interact with the another, the formation of the new bond with the adsorbate is accompanied by the breaking of the coordination bonds with the lattice oxygen atoms. It is noteworthy that the chemical structure of the adsorption complexes obtained does not differ from that of the analogous ones obtained by the interaction with the LAS of the face $(11\bar{2}0)$ which are shown in Fig. 2B.

Unfortunately we do not know of any data concerning the experimental verification of the pro-

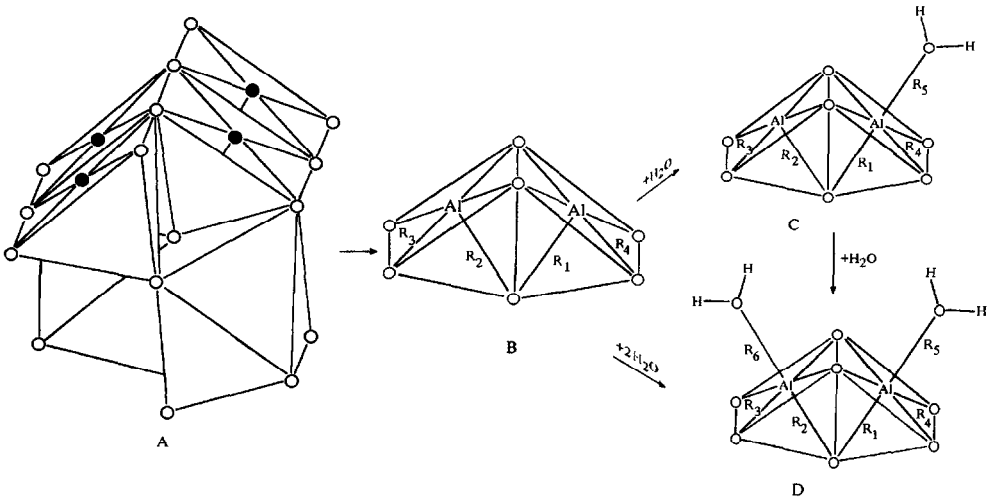

Fig. 3. The geometric structure of the $(22\bar{4}0)$ face 'single' LAS cluster and the characteristic features of its interaction with the H_2O molecules.

posed adsorption mechanism on the α-Al_2O_3. But the literature data analysis on the adsorption on zeolites has shown that the assumption of the LAS A atom possible transition from the 'structural' coordination into the 'adsorption' one was made already in 1965 [44]. In 1990 this hypothesis was supported experimentally [32].

The result for the H_2O molecule adsorption on the 'paired' LAS of the face $(22\bar{4}0)$ is also interesting. In this case the adsorbate molecule can simultaneously interact with two LAS Al atoms (see Fig. 3C); this increases the interaction energy by 3–7 kcal/mol as compared to the 'single' sites. The adsorption process is accompanied only by a slight (0.049 Å) displacement of the LAS Al atoms in the direction of the adsorbate (Fig. 3C and Table 1). The degree of variation of the interaction energy does not contradict the ab initio data of the H_2O adsorption on the 'paired' site α-Al_2O_3 [43] where this value is shown not to be a simple sum of the interaction energies with 'single' sites.

We considered also the H_2O molecule interaction with the 'single' sites of the face $(22\bar{4}0)$. The repulsion of the two Al atoms described above in the site of this type is seen clearly for the site interacting with the first H_2O molecule. In this process one Al atom moves towards the adsorbate, and the other is given the possibility to bury itself deeper inside the cluster (Fig. 4C, 4D and Table 1). When the next water molecule adsorbs, the second Al atom also moves to the cluster surface (Fig. 4C and 4D).

Similarly to the case of (0001) considered above, the $(11\bar{2}0)$ interaction with the H_2O mol-

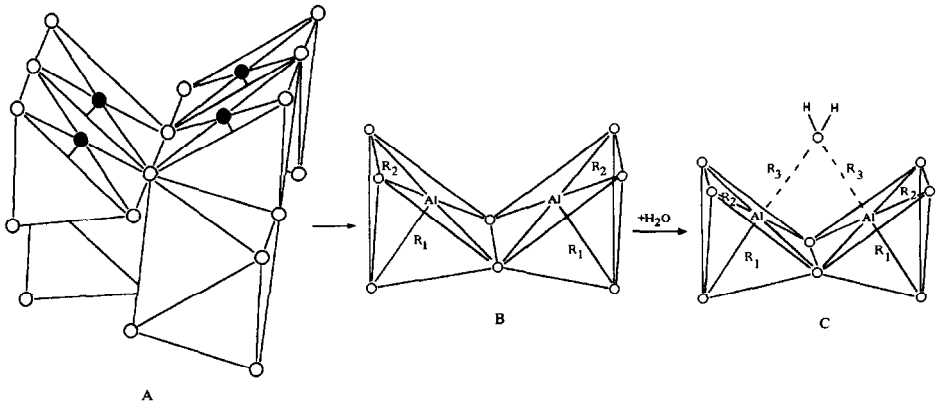

Fig. 4. The geometric structure of the $(22\bar{4}0)$ face 'paired' LAS cluster and its interaction with the H_2O molecules.

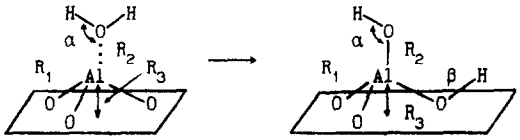

Fig. 5. The H_2O adsorption dissociative form on the (0001) face.

ecule energy value was taken as the measure of the acidity strength of these centers. These values for the 3C, 4C, 4D complexes are 17.1, 14.1 10.6 kcal/mol respectively. These values lead to the conclusion that the face $(22\bar{4}0)$ LASs are stronger than the face (0001) sites but weaker than the face $(11\bar{2}0)$ sites. The comparison of the experimentally observed variation in the range of heats of adsorption [10–12] with the calculated values allows us to classify these LAS as medium force sites.

Dissociative form of the H_2O adsorption. The opinion is widespread in the literature that the H_2O on the LAS adsorption according to the dissociative mechanism is possible; this in fact should lead to the LAS 'destruction' and formation of Brønsted acid sites. In [4,45–48] the experimental evidence is given of the dissociative forms of the H_2O, CH_3OH, H_2 adsorption on various modifications of aluminum oxide. That is why the results concerning the dissociative forms mechanism of water molecules adsorption on the face (0001) LAS of the α-Al_2O_3 are given below.

The geometric structure and composition of the LAS cluster are analogous to those of the cluster used to study the H_2O adsorption associative form. Because of the initial cluster's sophisticated geometric structure only the geometric part of its structure is shown the in Fig. 5A, namely the part which varies significantly in the course of the calculations. It should be taken into account that this structure corresponds to the local minimum obtained when investigating the H_2O adsorption associative form (Fig. 1C).

The adsorption dissociative form was obtained under the assumption that the oxygen atom of the water molecule, when dissociating interacts with the LAS Al atom and the water molecule proton is transferred to the nearest base site – the surface oxygen atom (Fig. 5B). In the structure thus obtained the positions of the Al atom and the water molecule oxygen are optimized along the Z-axis; the angle β is optimized as well (Fig. 5B and Table 1). In fact, this number of the cluster parameters to be optimized corresponds to the optimization option used in the non-dissociative adsorption case, which is why we believe that the comparison of the geometric and energy characteristics of the local minima corresponding to different forms of water molecule adsorption is justified.

The obtained local minima structure is shown in Fig. 5B and Table 1 contains this minima geometric characteristics. The angle α in the structures A and B (Fig. 5) is 128.0°, and the angle β is 98.78°. As one can see from Table 1, in structure B the Al atom has increased by 0.065 Å its three interatomic distances to the surface oxygen and has decreased by 0.175 Å its distance to the hydroxyl group formed by the water molecule dissociation. In addition it lies by 0.168 Å higher than that in the A structure with respect to the plane of the oxygen atoms. That means that the surface relaxation processes are more profound in the case of the dissociative adsorption than those in the case of associative adsorption.

The heats of formation comparison for the A and B (Fig. 5 and Table 1) shows that the dissociative form of adsorption is preferable to the non-dissociative one: the energy gain is 13.2 kcal/mol. The water molecule adsorption energy according to that mechanism is 33.8 kcal/mol; this value lies in the experimentally observed range of adsorption heats for the small degrees of surface occupation [10–12].

4. Conclusions

The results presented above enable us to make following conclusions:

1. The wide variety of LAS on the α-Al_2O_3 surface is related to the profound variations of the geometric structure of the surface. Because of those variations some of the Al^{3+} ions coordinate with the bulk O^{2-} ions; this involves the forma-

tion of LAS where the Al^{3+} ion is surrounded by the O^{2-} ions.

2. The principal possibility is shown for the Al atoms in three-coordination state to exist on the aluminum oxide α-modification $(11\bar{2}0)$ surface. The sites of such a type can be responsible for the large differential adsorption heats at the small surface occupation degrees.

3. The H_2O–(0001) face LAS interaction process according to the associative mechanism is accompanied by the transfer of the LAS Al atom from the 'structure' coordination into an 'adsorption' one. The chemical structure of the adsorption complexes thus formed does not differ from that of the analogous formations obtained by interaction of the H_2O with the face $(11\bar{2}0)$ sites.

4. The H_2O molecular adsorption according to the dissociative mechanisms is accompanied by more profound structure changes of the (0001) surface than in the case of the associative adsorption.

5. The study of the geometric structure features of the 'single' and 'paired' Lewis acid sites for the α-Al_2O_3 $(22\bar{4}0)$ face having the aluminum atoms in the 5-coordination state shows that the 'single' sites geometric characteristics are influenced to a certain degree by the mutual repulsion of the two incompletely coordinated aluminum atoms. This effect takes place in the study of the adsorption complex structure with the H_2O molecule, this complex having one Al atom moving to the adsorbent and another shifting in the opposite direction inside the bulk.

Acknowledgements

The authors thanks Prof. G.M. Zhidomirov and Dr. A.G. Pelmenshchikov (Institute of Catalysis, SD Academy of Science of Russia) for the initiative in carrying out of the $(22\bar{4}0)$ face calculations. The authors are grateful to the Fund of Fundamental Researches of the Ukrainian Science and Technology Committee for the partial financial support of this work.

References

[1] V.S. Pankov and M.V. Tsiulnikov, The Epitaxial Silicon Layers on Dielectric Substrates and the Devices based on Them, Moskow Energia, 1979, (in Russian).
[2] F. Divksen, Chemsa., 9 (1989) 122.
[3] K. Domen and T.J. Chuang, J. Chem. Phys., 90 (1989) 3318.
[4] Y.M. Garmashev, A.I. Trochymets and A.I. Vladyko, Kinet. Catal. (USSR)., 26 (1985) 1393 (in Russian).
[5] B.G. Linsen (Ed.), Physical and Chemical Aspects of Adsorbents and Catalysts, Academic Press, London, New York, 1970.
[6] V.B. Golubev and E.V. Lunina, Mod. Probl. Phys. Chem. (USSR)., 13 (1982) 229 (in Russian).
[7] K.R. Carduner, J. Magn. Reson., 81 (1989) 312.
[8] C. Morterra, S. Coluccia, A. Chiorino and F. Boccuzzi, J. Catal., 54 (1978) 348.
[9] E.F. Paukshtys and E.N. Yurchenko, Adv. Chem. (USSR)., 52 (1983) 426 (in Russian).
[10] G. Della Gutt, F. Fabini and G. Verturello, Colloq. Int. CNRS., 201 (1972) 565.
[11] D.G. Gieuseppe, F. Bin and V. Giovanni, Chim. Phys., Phys. Chim. Biol., 70 (1973) 64.
[12] G. Busca, P.F. Rossi, V. Lorenzelli, M. Bonaissa and J.C. Lavalley, J. Phys. Chem., 89 (1985) 5433.
[13] G.A. Segal (Ed.), Semiempirical Methods of Electronic Structure Calculations., Plenum Press, New York, 1977.
[14] G.M. Zhidomirov and I.D. Mikheykin, Cluster Approach in the Quantum-chemical Research of Chemisorption and Surface Structures, VINITI, Moscow, 1984, (in Russian).
[15] A.D. Serazetdinov, E.A. Ryaenko and O.I. Chektikina, Phys. Status Solidi B, 756 (1989) 205.
[16] P. Fantucci and G. Pacchini, Phys. Status Solidi B, 753 (1989) 193.
[17] J. Kim, M. Kim, J. Okamoto and T. Imanaka, J. Catal., 115 (1989) 319.
[18] M.B. Fleisher, L.O. Golendere and M.V. Shimanskaya, J. Chem. Soc. Faraday Trans., 87 (1991) 745.
[19] N. Zhanpeisov, A.G. Pelmenshchikov and G.M. Zhidomirov, Mendeleev Commun., 4 (1992) 149.
[20] S. Beran, J. Mol. Catal., 30 (1985) 95.
[21] A.G. Pelmenshchikov, G.M. Zhidomirov, S. Beran and J. Tino, Phys Status Solidi A, 99 (19870 557.
[22] A. Redondo and P.J. Hay, J. Phys. Chem., 97 (1993) 11754.
[23] H. Kawakami and S. Yoshida, J. Chem. Soc., Faraday Trans. II, 81 (1985) 1117.
[24] H. Kawakami and S. Yoshida, J. Chem. Soc., Faraday Trans. II, 81 (1985) 1129.
[25] V.M. Zelenkovsky, P.P. Mardilovitsh, G.N. Liysenko, A.I. Trohymets and G.M. Zhidomirov, J. Phys. Chim. (USSR), 61 (1987) 3369.
[26] V.M. Gunko, Theor. Exp. Chem. (USSR), 21 (1985) 651 (in Russian).
[27] V.M. Gunko and L.M. Roev, Theor. Exp. Chem. (USSR), 20 (1984) 298 (in Russian).
[28] L.G. Gorb, V.M. Gunko, V.V. Goncharuk and S.A. Karakhim, React. Kinet. Catal. Lett., 38 (1989) 21.

[29] N.N. Ilchenko, A.G. Grebenuk, L.G. Gorb, V.V. Goncharuk and G.M. Zhidomirov, Theor. Exp. Chem. (USSR), 5 (1989) 581 (in Russian).
[30] L.G. Gorb, N.N. Ilchenko and V.V. Goncharuk, J. Mol. Struct. (Theochem), 276 (1992) 17.
[31] O.V. Krilov, Mechanism of Catalysis, Nauka, Novosibirsk, 1984, (in Russian).
[32] A.S. Medin, V.Y. Borovkov, V.B. Kazansky, A.G. Pelmenshchikov and G.M. Zhidomirov, Zeolites, 10 (1990) 668.
[33] P. Hartman, J. Cryst. Growth, 96 (1989) 667.
[34] W.C. Mackrodt, J. Chem. Soc., Faraday Trans. II, 85 (1989) 541.
[35] W.C. Zelenkovski, P.P. Mardilovich and G.M. Zhidomirov, React. Kinet. Catal. Lett., 38 (1989) 73.
[36] J. Sauer, Chem. Rev., 89 (1989) 199.
[37] R.S. Bingham, M.J.S. Dewar and D.H. Lo, J. Am. Chem. Soc., 97 (1975) 1294.
[38] L.G. Gorb, N.N. Ilchenko, A.G. Grebenuk and I.A. Abronin, J. Struct. Chem. (USSR), 30 (1989) 163 (in Russian).
[39] A.G. Pelmenshchikov, I.D. Mikheikin and G.M. Zhidomirov. Kinet Catal. (USSR)., 30 (1989) 163 (in Russian).
[40] G.M. Zhidomirov, A.G. Pelmenshchikov, S. Beran and J. Tino, J. Struct. Chem., 27 (1986) 150 (in Russian).
[41] A.G. Pelmenshchikov, G.M. Zhidomirov, S. Beran and J. Tino, Phys. Status Solidi A, 99 (1987) 57.
[42] O.P. Kryvoruchko, V.M. Mastychin, B.N. Zolotovsky, S.N. Paramzin S.M., D.P. Kletsov and V.A. Buyanov, Kinet. Catal. (USSR), 26 (1985) 763 (in Russian).
[43] V.M. Zelenkovskii, P.P. Mardilovich and G.M. Zhidomirov, React. Kinet. and Catal. Lett. 38 (1989) 73.
[44] J.B. Uytterhoeven, L.G. Christer and W.K. Hall, J. Phys. Chem., 69 (1965) 21.
[45] L.H. Little, Infrared Spectra of Adsorbed Species, Academic Press, London, New York, 1966.
[46] G.D. Chukin, J. Strukt. Chem. (USSR), 17 (1976) 122. (in Russian).
[47] G. Busca, P.F. Rossi, V. Lorenzelli, M. Benaisa, J. Travert and J.C. Lavalley, J. Phys. Chem., 89 (1985) 5433.
[48] I.N. Senchenya and V.B. Kazansky, Kinetic and Catalysis (USSR)., 29 (1988) 1331 (in Russian).
[49] N.N. Ilchenko, L.G. Gorb and V.V. Goncharuk, Surf. Sci., 274 (1992) 287.